FEMALE END VIEW (J1–J8)

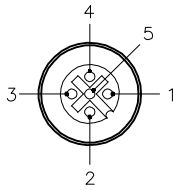

MALE END VIEW

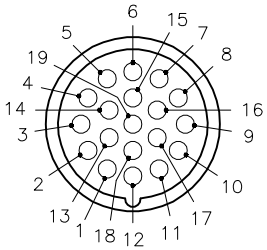

M23 connector

1 = VIOLET
2 = RED
3 = GRAY
4 = RED/BLUE
5 = GREEN
6 = BLUE
7 = GRAY/PINK
8 = WHITE/GREEN
9 = WHITE/YELLOW
10 = WHITE/GRAY
11 = BLACK
12 = GREEN/YELLOW
13 = YELLOW/BROWN
14 = BROWN/GREEN
15 = WHITE
16 = YELLOW
17 = PINK
18 = GRAY/BROWN
19 = BROWN

AUXILARY VIEW
HOUSING
BACKSIDE
HALF SCALE

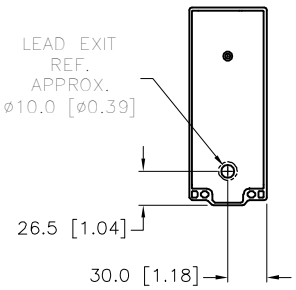

SPECIFICATIONS

NUMBER OF CONDUCTORS [AWG]	3x18 AWG/16x22 AWG
CONDUCTOR INSULATION MATERIAL	PVC
HOUSING MATERIAL/COLOR	NYLON/BLACK
RECEPTACLE MATERIAL/PLATING	BRASS/NICKEL
CONTACT CARRIER MATERIAL/COLOR	NYLON OR TPU/BLK (J1–J8)
CONTACT CARRIER MATERIAL/COLOR	NYLON PBT/GRAY (P1)
CONTACT MATERIAL/PLATING	BRASS/GOLD
SEALING RING MATERIAL	FKM/FPM (J1–J8)
O–RING/GASKET MATERIAL	RUBBER (NBR or FPM) (P1)
OPERATING VOLTAGE	10–48 VDC
OPERATING CURRENT	4.0 AMPS PER PORT, 9.0 AMPS TOTAL
LED CURRENT	12mA MAX AT 48VDC SUPPLY VOLTAGE(PER LED)
PROTECTION CLASS to DIN 40050	IP 67 – ONLY WHEN ALL RECEPTACLES ARE COVERED WITH PLUGS OR CONNECTED
OPERATING TEMPERATURE	–30˚C to +80˚C (–25˚F to +176˚F)

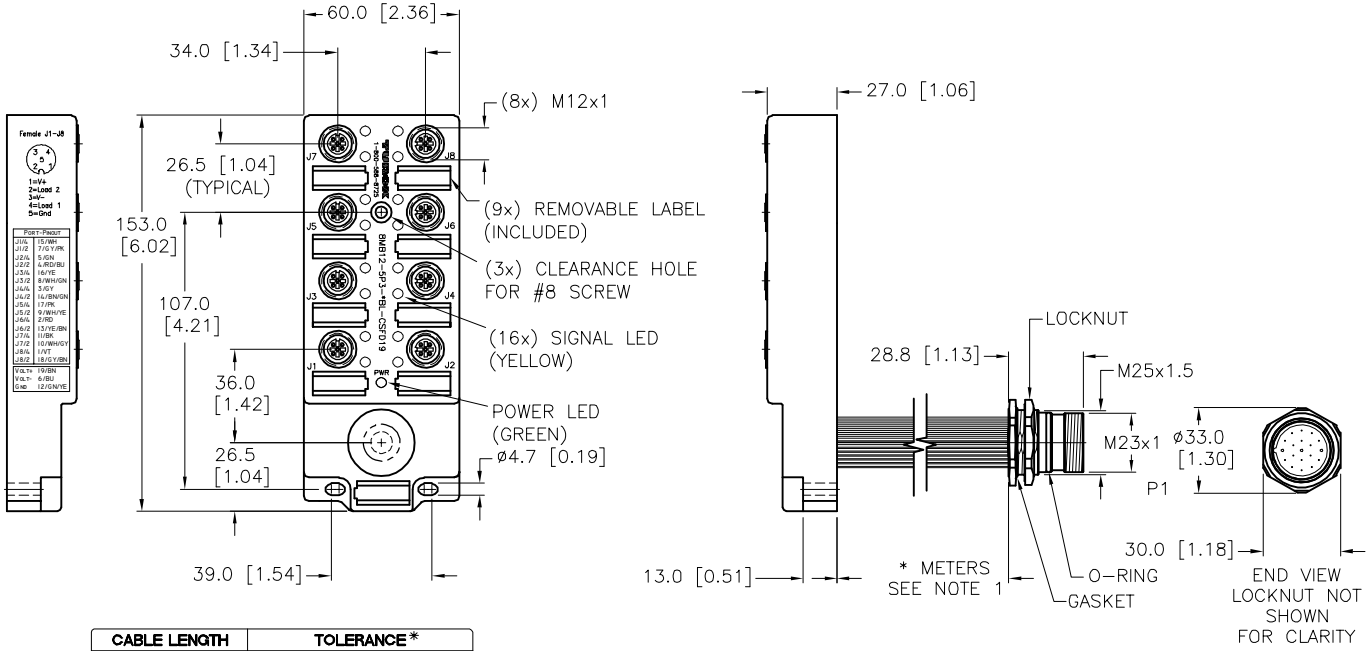

WIRING DIAGRAM

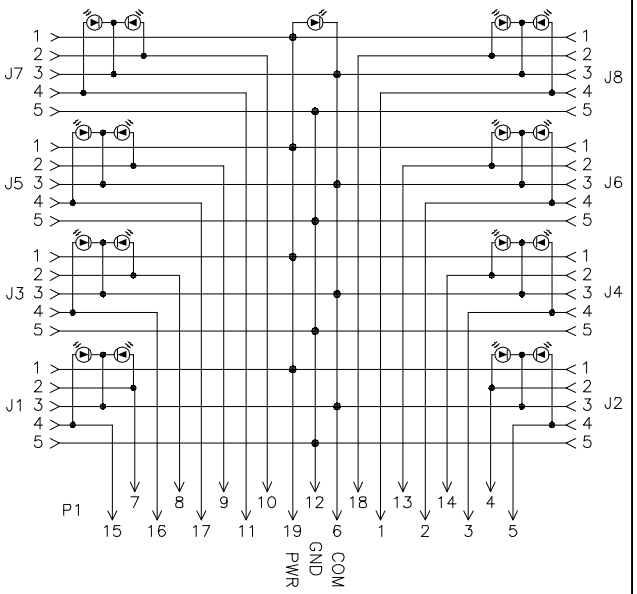

CABLE LENGTH	TOLERANCE*
ALL LENGTHS	+ 4% (OR 50mm) OF LENGTH – 0% (OR 0mm) OF LENGTH WHICHEVER IS GREATER
STRIP LENGTH	**TOLERANCE***
0–7mm	±0.5mm
8–29mm	±1.0mm
30–49mm	±2.0mm
50–69mm	±3.0mm
70–100mm	±4.0mm
OVER 100mm	±5.0mm
***UNLESS OTHERWISE SPECIFIED**	

CLOSURE CAPS
(2 INCLUDED)

NOTES:

1. "*" INDICATES CABLE LENGTH IN METERS. CONTACT TURCK TO ORDER SPECIFIC LENGTHS.

SOURCE DRAWING - FOR REFERENCE ONLY

REV	DESCRIPTION	BY	DATE	ECO NO.
D	UPDATED SEALING MATERIAL PER ECO	TV	08/11/16	56141

RELATED DOCUMENTS
1.
2.
3.
4.

3RD ANGLE PROJECTION

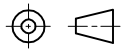

THIS DRAWING IS PROPERTY OF TURCK INC. USE OF THIS DOCUMENT WITHOUT WRITTEN PERMISSION IS PROHIBITED.

TURCK INC
High Technology Sensors and Automation Controls
3000 CAMPUS DRIVE
MINNEAPOLIS, MN 55441
1–800–544–7769
(763) 553–7300
(763) 553–0708 fax
turck.com

MATERIAL: SEE SPECIFICATIONS

FINISH: SEE SPECIFICATIONS

ALL DIMENSIONS DISPLAYED ON THIS DRAWING ARE FOR REFERENCE ONLY

CONTACT TURCK FOR MORE INFORMATION

DRFT: RDS | DATE: 12/20/10
APVD: | SCALE: 1=3.0

UNIT OF MEASUREMENT
MILLIMETER [INCH]
DO NOT SCALE THIS DRAWING

DESCRIPTION: 8MB12–5P3–*BL–CSFD19

IDENTIFICATION NO.:

REV: D

FILE: 777027066

SHEET 1 OF 1